ENE TECHNOLOGY INC.

KB3700

Keyboard Controller

Datasheet

Revision 0.1

July. 2006

ENE RESERVES THE RIGHT TO AMEND THIS DOCUMENT WITHOUT NOTICE AT ANY TIME. ENE ASSUMES NO RESPONSIBILITY FOR ANY ERRORS APPEAR IN THE DOCUMENT, AND ENE DISCLAIMS ANY EXPRESS OR IMPLIED WARRANTY, RELATING TO SALE AND/OR USE OF ENE PRODUCTS INCLUDING LIABILITY OR WARRANTIES RELATING TO FITNESS FOR A PARTICULAR PURPOSE, OR INFRINGEMENT OF ANY PATENTS, COPYRIGHTS OR OTHER INTELLECTUAL PROPERTY RIGHTS.

Copyright©2006, ENE Technology Inc. All rights reserved.

Headquarters
4F-1, No.9, Prosperity Rd.,
Science-based Industrial Park,
Hsinchu City, Taiwan, R.O.C
TEL: 886-3-6662888
FAX: 886-3-6662999
http://www.ene.com.tw

Taipei Office
9F, No.88, Bauchiau Rd.
Shindian City, Taipei,
Taiwan, R.O.C.
TEL: 886-2-89111525
FAX: 886-2-89111523

CONTENT

1. FEATURES 4
1.1 FEATURE SUMMARY 4
1.2 BLOCK DIAGRAM 7
2. PIN ASSIGNMENT AND DESCRIPTION 8
2.1 PIN LIST 8
2.2 I/O BUFFER TABLE 9
2.3 I/O BUFFER CHARACTERISTIC TABLE 9
2.4 I/O NAMING CONVENTION 9
3. PIN DESCRIPTIONS 10
3.1 HARDWARE TRAP 10
4. MODULE DESCRIPTIONS 10
4.1 CHIP ARCHITECTURE 11
4.1.1 Power Planes 11
4.1.2 Clock Domains 11
4.1.3 Reset Domains 11
4.2 GPIO 11
4.2.1 GPIO Functional Description 11
4.2.2 GPIO Input / Output Control Structure 13
4.3 KBC 14
4.3.1 KBC Functional Description 14
4.3.2 KBC Registers Descriptions (Base Address = FC80h, 32 bytes) 15
4.4 PWM 15
4.4.1 PWM Functional Description 16
4.4.2 PWM Registers Descriptions (Base address_FE00h, 16 bytes) 16
4.5 GPT 17
4.5.1 GPT Functional Description 17
4.5.2 GPT Register Descriptions (Base address = FE50h, 16 bytes) 17
4.6 SPI/ISP DEVICE INTERFACE 18
4.6.1 SPI/ISP Functional Description 18
4.6.2 SPI Registers Descriptions (Base address = FE70h, 16 bytes) 18
4.6.3 ISP Registers Descriptions (8 bytes) 19
4.7 WDT 21
4.7.1 WDT Functional Description 21
4.7.2 WDT Registers Descriptions (Base address = FE80h, 16 bytes) 21

Copyright©2006, ENE Technology Inc.

4.8 LPC **22**
4.8.1 LPC / FWH Functional Description *22*
4.8.1.1 LPC Decoding IO Ports *22*
4.8.1.2 LPC Decoding Memory Space *22*
4.8.2 LPC Registers Descriptions (Base address = FE90h, 16 bytes) *22*
4.9 PS / 2 INTERFACE **24**
4.9.1 PS/2 Functional Description *24*
4.9.2 PS2 Registers Descriptions (Base Address = FEE0h, 32 bytes) *24*
4.10 EC **26**
4.10.1 EC Functional Description *26*
4.10.1.1 Hardware EC Commands 26
4.10.1.2 EC Status Register 26
4.10.1.3 EC Command Register 26
4.10.1.4 EC Command Program Sequence 27
4.10.1.5 EC Index IO Mode 27
4.10.1.6 SCI Generation 27
4.10.1.7 SCI ID Table 28
4.10.2 EC Register Descriptions (Base Address = FF00h, 32 bytes) *28*
4.11 GPWU **32**
4.11.1 GPWU Functional Description *32*
4.11.2 GPWU Register Descriptions (Base Address = FF30h, 96 bytes) *32*
4.12 8051 MICROPROCESSOR **32**
4.12.1 Interrupt Vectors Table *32*
4.12.2 SFR Map *33*
4.12.3 SFR Descriptions *34*
5. ELECTRONIC CHARACTERISTICS **37**
5.1 ABSOLUTE MAXIMUM RATING **37**
5.2 RECOMMENDED OPERATING CONDITION **37**
5.3 OPERATING CURRENT **37**
6. PACKAGING INFORMATION **39**
6.1 64 LQFP **39**
7. REVISION HISTORY **40**

Copyright©2006, ENE Technology Inc.

1. Features

1.1 Feature Summary

- **Low Pin Count Host Interface (LPC)**
  - SIRQ supporting IRQ1, IRQ12, SCI
  - I/O Address Decoding:
    - KBC IO Port 60h/64h
    - Programmable EC IO Port 62h/66h and 68h/6Ch
    - Programmable 4-byte Index I/O ports to access internal registers
    - One Programmable I/O write byte-address decoding

- **X-Bus Interface (XBI)**
  - SPI Flash support, the operation frequency runs at least 50MHz.
  - Addressable Memory range up to 24MB.
  - 8051 64KB code memory can be mapped into 4 independent 16KB pages.

- **8051 Microprocessor**
  - Industry 8051 Instruction set complaint with 3~5 cycles per instruction.
  - Programmable 8/16/32 MHz clock
  - Fast instruction fetching from XBI Interface
  - 128 bytes and 2KB tightly-coupled SRAM
  - 24 extended interrupt sources.
  - Two 16-bit tightly-coupled timer

- **8042 Keyboard Controller**
  - 8 Standard keyboard commands processed by hardware
  - Each hardware command can be optionally processed by firmware

- **Embedded Controller (EC)**
  - Five EC Standard Commands can be processed by hardware
  - ACPI Specification 2.0 compliant
  - Support customer command by firmware
  - Programmable EC I/O port addressing (default 62h/66h)

- **Analog To Digital Converter (ADC)**
  - 6 built-in ADCs with 8-bit resolution.
  - The ADC pins can be alternatively configured as General Purpose Inputs (GPI).

Copyright©2006, ENE Technology Inc.

- **Pulse Width Modulator (PWM)**
  - 5 built-in PWMs
  - Selectable clock sources: 1MHz/64KHz/4KHz/256Hz.
  - Configurable cycle time (up to 1 sec) and duty cycle.

- **Watchdog Timer (WDT)**
  - 32.768KHz input clock with 20-bit time scale.
  - 8-bit watchdog timer interrupt and reset setting

- **General Purpose Timer (GPT)**
  - Two 16-bit, two 8-bit general purpose timers with 32.768KHz resolution

- **General Purpose Wake-Up (GPWU)**
  - All General Purpose Input pins can be configured to generate interrupts or wake-up event.

- **General Purpose Input/Output (GPIO)**
  - All I/O pins are bi-direction and configurable
  - All outputs can be optionally tri-stated
  - All inputs equipped with pull-up, high/low active, edge/level trigger selection
  - All GPIO pins are bi-direction, input and output.
  - Max. 43 GPIOs

- **Power Management**
  - Sleep State: 8051 Program Counter (PC) stopped

    Deep Sleep State: Stop all internal clocks. Target power consumption ~10uA.

Copyright©2006, ENE Technology Inc.

	KB3700 64-pin LQFP	KB3920 144-pin LQFP
Chip Dimension	10x10 mm^2	20x20 mm^2
Microprocessor	8051	8051
Built-in SRAM	2048 + 128 bytes	2048 + 128 bytes
8051 Clock	32 ~8 MHz (adjustable)	22~8 MHz
Flash Memory Range	4M bytes (SPI)	1M bytes(ISA), 2M bytes (SPI)
Flash I/F Clock	65~32 MHz (adjustable)	65/32 MHz (2 select 1)
ADC	6	4
DAC	N.A.	4
Watch Dog Timer	1	1
PWM	5	4
External PS/2 devices	2	3
GPIOs	Max 43	Max 89 pins
KB matrix scan	N.A.	18x8
FAN Controller	N.A.	2
General Purpose Timer	6	6
SM Bus	N.A.	2 Interfaces
	N.A.	1 Internal Controller
HW KBC Standard Commands	8	8
HW IKB Standard Commands	N.A.	10
HW EC Standard Commands	5	5
Power Consumption	TBD (target 12mA) TBD (target 3mA in IDLE mode) TBD(target 500 uA in STOP mode)	15 mA(in Normal RUN) 4 mA (in IDLE mode) 10 uA(in STOP mode)

Copyright©2006, ENE Technology Inc.

1.2 Block Diagram

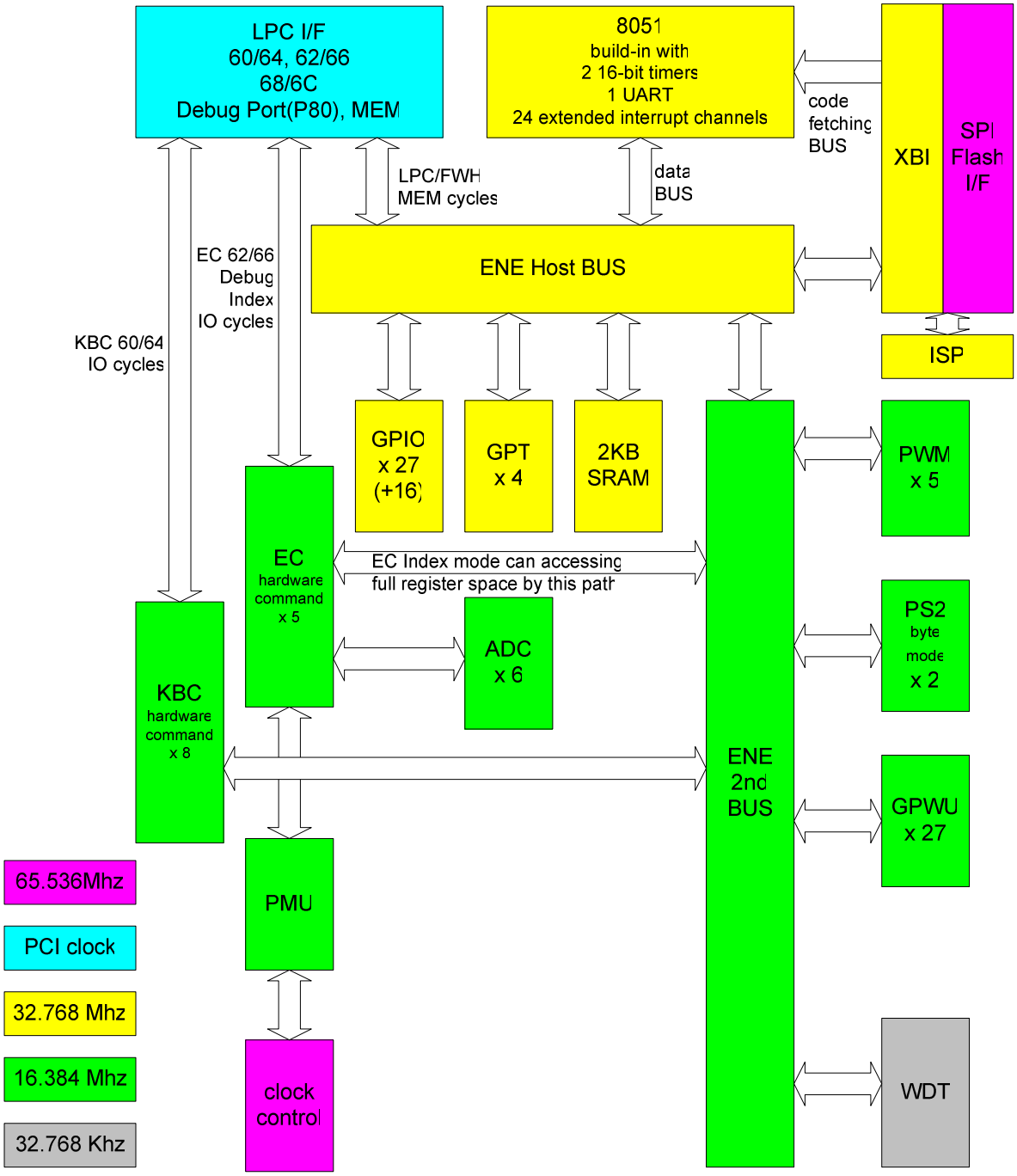

2. Pin Assignment and Description

2.1 Pin List

No.	Pin Name	GPIO	Alt. Output.	Alt. Input	Default	Reset	IOCELL
1	GPIOE0	GPIOE0					BQC04HU
2	GPIOE1	GPIOE1					BQC04HU
3	GPIOE2	GPIOE2					BQC04HU
4	GPIOE3	GPIOE3					BQC04HU
5	SERIRQ						BCC16H
6	GPIO00	GPIO00	GA20				BQC04HU
7	LFRAME#						BCC16H
8	LAD3						BCC16H
9	GPIO01	GPIO01	KBRST#				BQC04HU
10	GPIO02	GPIO02		PLLCLK_REF2			BQC04HU
11	LAD2						BCC16H
12	LAD1						BCC16H
13	VCC						VCC
14	LAD0						BCC16H
15	GND						GND
16	GPIO03	GPIO03		PCICLK			BCC16H
17	GPIOE4	GPIOE4					BQC04HU
18	GPIOE5	GPIOE5					BQC04HU
19	GPIOE6	GPIOE6					BQC04HU
20	GPIOE7	GPIOE7					BQC04HU
21	GPIO04	GPIO04		PCIRST#			BCC16H
22	GPIO05	GPIO05	SCI#				BQC04HU
23	GPIO06	GPIO06	PWM0/E51_TXD				BCC16H
24	GPIO07	GPIO07	PWM1/E51_CLK	E51_RXD			BCC16H
25	GPIO08	GPIO08	PWM2				BCC16H
26	GPIO09	GPIO09	PWM3				BCC16H
27	GPIO0A	GPIO0A	PWM4				BCC16H
28	GPIO0B	GPIO0B		E51_TMR0			BQC04HU
29	GPIO0C	GPIO0C		E51_TMR1			BQC04HU
30	GPIO0D	GPIO0D	E51_TXD	ECRST#			BQC04HU
31	GPIO0E	GPIO0E	PLLCLK32	E51_INT0	ECRST#		BQC04HU
32	GPIO0F	GPIO0F	POR	E51_INT1			BQC04HU
33	GPIOE8	GPIOE8					BQC04HU
34	AD3						IQA
35	AD4						IQA
36	AD5						IQA
37	GPIO10	GPIO10					BQC04HU
38	AD0						IQA
39	AD1						IQA
40	AD2						IQA
41	AVCC						AVCC
42	AGND						AGND
43	GPIO11	GPIO11	PSCLK1	PSCLK1			BQC04HU_10K
44	GPIO12	GPIO12	PSDAT1	PSDAT1			BQC04HU_10K

Copyright©2006, ENE Technology Inc.

45	GPIO13	GPIO13	PSCLK2	PSCLK2			BQC04HU_10K
46	GPIO14	GPIO14	PSDAT2	PSDAT2			BQC04HU_10K
47	GPIO15	GPIO15		TEST_CLK			BQC04HU
48	GPIO16	GPIO16		TP_CLK_TEST			BQC04HU
49	GPIOEC	GPIOEC					BQC04HU
50	GPIOED	GPIOED					BQC04HU
51	GPIOEE	GPIOEE					BQC04HU
52	GPIOEF	GPIOEF					BQC04HU
53	GPIO17	GPIO17	CLK	TP_PLL_TEST			BQC04HU
54	GPIO18	GPIO18	CLK32MHz(8051)	TP_ISP_MODE			BQC04HU
55	GPIO19	GPIO19	CLK16MHz(peri)	TP_IO_TEST			BQC04HU
56	GPIO1A	GPIO1A	CLK32MHz(WDT				BQC04HU
57	GPIO1B	GPIO1B					BQC04HU
58	SPIDI						BCC16H
59	SPIDO						BCC16H
60	SPICLK						BCC16H
61	SPICS#						BCC16H
62	VCC						VCC
63	VCC18						VCC18
64	GND						GND

2.2 I/O Buffer Table

IO Name	Descriptions	Applications
BQC04HU	Schmitt trigger, 2~4mA Output / Sink Current, with , Input / Output / Pull Up Enable	GPIO
BQC04HU_10K	Schmitt trigger, 2~4mA Output / Sink Current, with , Input / Output / 10KΩ Pull Up Enable	GPIO
BCC16H	8~16mA Output / Sink Current , 5 V Tolerance, Input / Output Enable	LPC Interface
IQA	Mixed mode IO, ADC Enable, with GPI, 2~4mA Sink Current, Input Enable	ADC, GPIN

2.3 I/O Buffer Characteristic Table

Port / IO Name	IO	I	O	OE	IE	AE	5VTor	PE	Output / Sink Current
BQC04HU	V	V	V	V	V			40K (typ.)	2~4mA
BQC04HU_10K	V	V	V	V	V			10K (typ.)	2~4mA
BCC16H	V	V	V	V	V		V		8~16mA
IQA	V		V		V	V			

2.4 I/O Naming Convention

I IO Buffer Input
O IO Buffer Output
OE IO Buffer Output Enable
IE IO Buffer Input Enable
PE IO Buffer Pull High Enable
AE IO Buffer Analog mode Enable(AE > OE)
Q Schmitt Trigger
H 5V Tolerance

Copyright©2006, ENE Technology Inc.

3. Pin Descriptions

3.1 Hardware trap

Hardware trap pins will latch the external signal levels at the rising edge of ***ECRST#***. Either a High or Low value will be stored internally to serve as control signals as described below.

For normal application, there is no application component required for selecting the normal mode because KB3700 build-in internal pull up resistor to select the right operation mode.

After KB3700 booted, the pull up resistor may be disabled by GPIO register setting.

Pin name	64 Pins	HW Strap Description
TP_TEST ***(GPIO16)***	**48**	***TP_TEST***: Clock Test Mode (for testing and ISP Mode) **Low**: Clock Test Mode Enable. (all internal logic will use **GPIO15** as clock source)
TP_PLL ***(GPIO17)***	**53**	***TP_PLL***: PLL Test Mode (for testing) **LOW**: PLL Test Mode Enable ***GPIO0E*** is PLL 32MHz clock output. ***GPIO0F*** is Power On Reset output. **HIGH**: Normal operation **(MUST, Power-On Default)**
TP_ISP ***(GPIO18)***	**54**	***TP_ISP***: ISP Mode (for programming external SPI flash) **LOW**: ISP Mode Enable **HIGH**: Normal operation in not ISP mode **(MUST, Power-On Default)**
TP_IO ***(GPIO19)***	**55**	***TP_IO***: IO Test Mode (for testing) **LOW**: IO Test Mode Enable **HIGH: Normal operation (MUST, Power-On Default)**

4. Module Descriptions

The following table gives the corresponding memory map for accessing. Each module will be described detail in the individual sections.

No.	Abbreviation	Device Full Name	Address Range	Size (Byte)	
1	Flash	Program space mapped to system BIOS	0000h~F3FFh	61K	
2	XRAM	Embedded SRAM	F400h~FBFFh	2K	
3	GPIO	General Purpose IO (include ADC, DAC)	FC00h~FC7Fh	128	1K
4	KBC	Keyboard Controller	FC80h~FC9Fh	32	
5	PWM	Pulse Width Modulation	FE00h~FE1Fh	32	
6	GPT	General Purpose 16-bit timer	FE50h~FE6Fh	32	
7	WDT	Watchdog Timer	FE80h~FE8Fh	16	
8	LPC	Low Pin Count	FE90h~FE9Fh	16	
9	XBI	X-BUS Interface	FEA0h~FECFh	48	
10	PS2	PS2	FEE0h~FEFFh	32	
11	EC	Embedded Controller **(hardware EC Space)**	FF00h~FF1Fh	32	
12	GPWU	General Purpose Wake-up **(hardware EC Space)**	FF20h~FE7Fh	96	

Copyright©2006, ENE Technology Inc.

4.1 Chip Architecture

4.1.1 Power Planes

There are 2 power planes in this chip. One is used for all logic, the other is used for Analog parts (ADC).

4.1.2 Clock Domains

There are 4 clock domain in KB3700.

- Flash chip interface clock. The clock default in 16MHz, and can be to 32MHz or 64MHz.
- 8051 / XBI use high clock (setting in CLKCFG, FF0Dh), ranges from 22~4MHz.
- WDT uses 32.768KHz clock. WDT default use internal 32KHz clock. The WDTCFG bit 7 options can switch WDT clock to external 32KHz clock oscillator.
- Other peripherals (GPWU, PWM,.) use low clock (setting in CLKCFG, FF0Dh), ranges from 8~2MHz.

4.1.3 Reset Domains

This chip builds in power on reset. There is also a input reset signal (***ECRST#***) for global reset.

WDT reset can reset almost all logic, except WDT and GPIO modules. The WDT reset can be set to only reset 8051 by EC register (PXCFG, FF14h).

There is additional 8051 reset source from EC register (PXCFG, FF14h).

4.2 GPIO

4.2.1 GPIO Functional Description

Multi-function pin **Output Function Selection** (FS) bit = 0, is set for GPIO Output Function, and FS bit = 1, is set for Alternative Output. The alternative input function is enabled by Input Enable register (IE), and is not affected by FS register.

Offset	Register Abbreviation	Register Full Name			Def	Bnk
		Bit	Attr	Description		
00 ~ 03	GPIOFS00 GPIOFS08 GPIOFS10 GPIOFS18	GPIO 00~1B Output Function Selection (0: GPO, 1: Alternative Output)				FC
		7~0	R/W	00h: GPIOFS00 for GPIO00~07	0	
				01h: GPIOFS08 for GPIO08~0F	0	
				02h: GPIOFS10 for GPIO10~17	0	
				03h: GPIOFS18 for GPIO18~1B	0	
10 ~ 15	GPIOOE00 GPIOOE08 GPIOOE10 GPIOOE18 GPIOEOE0 GPIOEOE8	GPIO 00~1B Output Enable (0: Output Disable, 1: Output Enable)				FC
		7~0	R/W	10h: GPIOOE00 for GPIO00~07	0	
				11h: GPIOOE08 for GPIO08~0F	0	
				12h: GPIOOE10 for GPIO10~17	0	
				13h: GPIOOE18 for GPIO18~1B	0	
				14h: GPIOEOE0 for GPIOE0~7	0	
				15h: GPIOEOE8 for GPIOE8~F (GPIOE9~A is N.A.)	0	
20 ~	GPIOD00 GPIOD08	GPIO 00~1B Data Output				FC
		7~0	R/W	20h: GPIOD00 for GPIO00~07	0	

				21h: GPIOD08 for GPIO08~0F	0	
				22h: GPIOD10 for GPIO10~17	0	
				23h: GPIOD18 for GPIO18~1B	0	
				24h: GPIOED0 for GPIOE0~7	0	
				25h: GPIOED8 for GPIOE8~F (GPIOE9~A is N.A.)	0	
30 ~ 36	**GPIOIN00 GPIOIN08 GPIOIN10 GPIOIN18 GPIOEIN0 GPIOEIN8 GPIADIN**	**GPIO 00~1B Input Status**				FC
		7~0	R/W	30h: GPIOIN00 for GPIO00~07	0	
				31h: GPIOIN08 for GPIO08~0F		
				32h: GPIOIN10 for GPIO10~17		
				33h: GPIOIN18 for GPIO18~1B		
				34h: GPIOEIN0 for GPIOEIN0~7		
				35h: GPIOEIN8 for GPIOEIN8~F (GPIOEIN9~A is N.A.)		
				36h: GPIAD0 for GPIAD0~5		
40 ~ 45	**GPIOPU00 GPIOPU08 GPIOPU10 GPIOPU18 GPIOEPU0 GPIOEPU8**	**GPIO 00~1B Pull Up Enable**				FC
		7~0	R/WC 1	40h: GPIOPU00 for GPIO00~07	0	
				41h: GPIOPU08 for GPIO08~0F	20	
				42h: GPIOPU10 for GPIO10~17	E0	
				43h: GPIOPU18 for GPIO18~1B	03	
				44h: GPIOEPU0 for GPIOE0~7	0	
				45h: GPIOEPU8 for GPIOE8~F (GPIOE9~A is N.A.)	0	
50 ~ 53	**GPIOOD00 GPIOOD08 GPIOOD10 GPIOOD18**	**GPIO 00~1B Open Drain Enable**				FC
		7~0	R/W	50h: GPIOOD00 for GPIO00~07	0	
				51h: GPIOOD08 for GPIO08~0F	0	
				52h: GPIOOD10 for GPIO10~17	0	
				53h: GPIOOD18 for GPIO18~1F	0	
60 ~ 66	**GPIOIE00 GPIOIE08 GPIOIE10 GPIOIE18 GPIADIE**	**GPIO 00~1B Input Enable**				FC
		7~0	R/W	60h: GPIOIE00 for GPIO00~07	0	
				61h: GPIOIE08 for GPIO08~0F	20	
				62h: GPIOIE10 for GPIO10~17	E0	
				63h: GPIOIE18 for GPIO18~1B	03	
				64h: GPIOEIN0 for GPIOE0~7	0	
				65h: GPIOEIN8 for GPIOE8~F (GPIOE9~A is N.A.)	0	
				66h: GPIAD0 for GPIAD0~5	0	
70	**GPIOMISC**	**GPIO MISC**				FC
		7~2	RSV		0	
		1	R/W	Select GPIO07 as ***E51_CLK*.**	0	
		0	R/W	Select GPIO06 as ***E51_TXD*.**	0	

4.2.2 GPIO Input / Output Control Structure

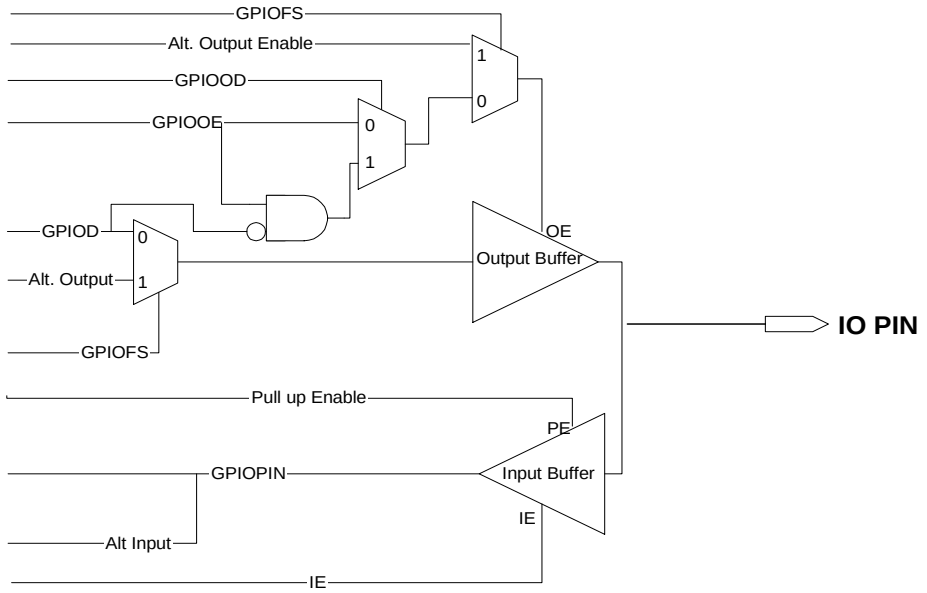

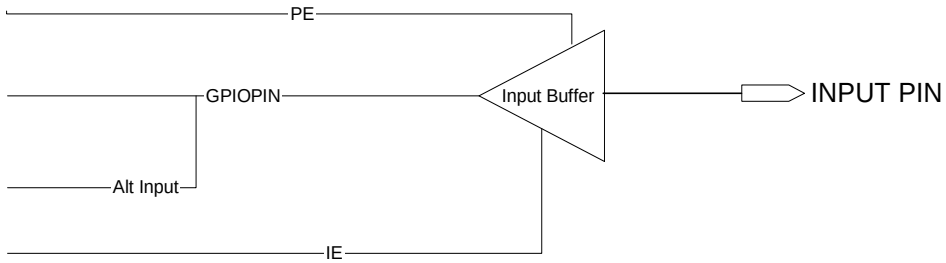

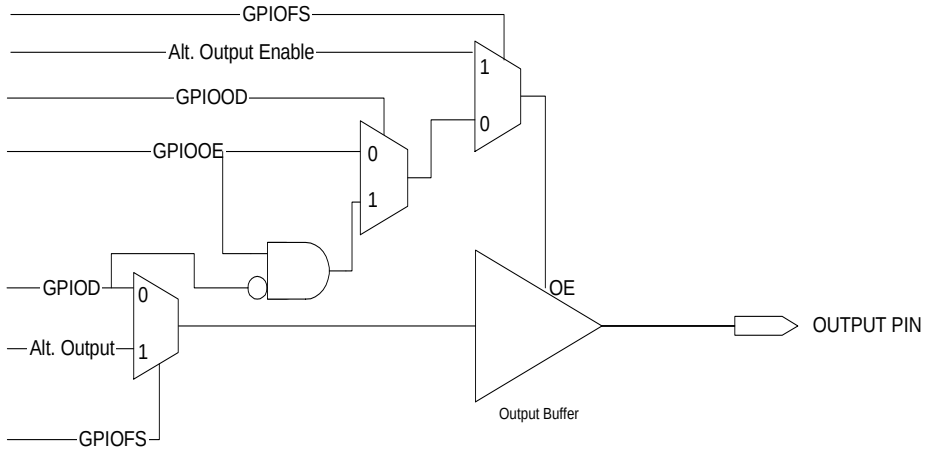

4.3 KBC

4.3.1 KBC Functional Description

a. IO 60h: KBC Data Input Register (KBDIN):

When the host writes I/O ports 60h and 64h, the data is stored in **KBDIN**. At the same time, the input buffer full flag (**IBF** bit in **KBSTS**) is set. The input data stored in **KBDIN** is directly fetched by the command processing logic and IBF is also cleared automatically.

b. I/O 60h: KBC Data Output Register (KBDOUT)

The data responded to the host is generated by the hardware circuit. The data is pushed into **KBDOUT** and the output buffer full flag (**OBF** bit in **KBSTS**) is set automatically. KB3700 can be configured to generate interrupts to the host when **OBF** is set. **OBF** is automatically cleared after that the host reads **KBDOUT** (through I/O port 60h).

c. I/O 64h: KBC Status Register (KBSTS)

The host read it through I/O port 64h. The bit format of this register is as follows:

Status Bit	Name	Description
7	**Parity Error**	PS/2 Bus parity error.
6	**General Timeout**	PS/2 Bus timeout.
5	**Aux OBF**	KBDOUT data is from PS/2 auxiliary device.
4	**Uninhibited**	Keyboard is not inhibited.
3	**A2**	Address of the previous write cycle.
2	**System Flag**	POST of the system is finished.
1	**IBF**	Input Buffer Full flag.
0	**OBF**	Output Buffer Full flag.

d. Hardware Processed Command

The following standard commands are processed by hardware directly.

Value	Command	Description	
20h	**Read Command Byte**	Read the command byte of KBC	
		Response	Command byte
C0h	**Read P1**	Read the input port of 8042 P1. Because there is no real 8042 in the chip, this command just emulates the function.	
		Response	Always return 00h
D0h	**Read P2**	Read the output port of 8042 P2. Because there is no real 8042 in the chip, this command just emulates the function.	
		Response	Bit1 is the status of GA20
D1h	**Write P2**	Write the output port of 8042 P2. Because there is no real 8042 in the chip, this command will just emulate the function and set/clear GA20 based on data bit 1.	
		Argument	Bit1 is the status of ***GA20***
D2h	**Write KB Output Buffer**	Write data into **KBDOUT** as if it comes from the keyboard.	
		Argument	Keyboard data
D3h	**Write AUX Output Buffer**	Write data into **KBDOUT** as if it comes from the auxiliary device.	
		Argument	Auxiliary data
E0h	**Read Test Input**	Read the test inputs T0 and T1 of 8042. Because there is no real 8042 in the chip, this command will just emulate the function.	
		Response	Always return 00h
FEh	**KB Reset**	This command generates a 6us low pulse on ***KBRST#***.	

4.3.2 KBC Registers Descriptions (Base Address = FC80h, 32 bytes)

Offset	Register Abbreviation	Register Full Name			Def	Bnk
		Bit	Attr	Description		
80h	**KBCCB**	**KBC Command Byte (KBC command 20h/60h)**			40	FFh
		7	RSV			
		6	R/W	Scan Code Conversion		
		5	R/W	Auxiliary Device Disable		
		4	R/W	Keyboard Device Disable		
		3	R/W	Inhibit Override		
		2	R/W	System Flag		
		1	R/W	**IRQ12** Enable		
		0	R/W	**IRQ1** Enable		
81h	**KBCCFG**	**KBC Configuration**			0	FFh
		7	R/W	Keyboard Lock Enable		
		6	R/W	Fast Gate A20 Control		
		5~4	RSV			
		3	R/W	Keyboard Lock		
		2	RSV			
		1	R/W	**IBF** Interrupt Enable. This bit enables KBC to generate interrupt to the 8051 at the rising edge of IBF, when the KBC command being received will be bypassed to firmware for processing.		
		0	R/W	**OBF** Interrupt Enable. This bit enables KBC to generate interrupt to the core processor at the falling edge of **OBF**.		
82h	**KBCIF**	**KBC Interrupt Pending Flag**			0	FFh
		7~3	RSV			
		2	R/WC1	KBC firmware mode in processing flag, Exit KBC firmware mode and re-enable hardware mode by writing 1		
		1	R/WC1	**IBF** interrupt pending flag		
		0	R/WC1	**OBF** interrupt pending flag		
83h	**KBCHWEN**	**KBC Hardware Command Enable**			0	FFh
		7	R/W	FEh: KB Reset command processed by hardware		
		6	R/W	E0h: read test input command processed by hardware		
		5	R/W	D3h: write AUX output buffer		
		4	R/W	D2h: write KB output buffer		
		3	R/W	D1h: write P2 command processed by hardware		
		2	R/W	D0h: read P2 command processed by hardware		
		1	R/W	C0h: read P0 command processed by hardware		
		0	R/W	20h: read command byte processed by hardware		
84h	**KBCCMD**	**KBC Command Buffer**			0	FFh
		7~0	RO	The data written to I/O port 64h will be stored in this register.		
85h	**KBCDAT**	**KBC Data Input / Output Buffer**			0	FFh
		7~0	R/W	Writing to this register will cause the output buffer full flag **OBF** to be set. The host can read this register through I/O port 60h.		
86h	**KBCSTS**	**KBC Host Status**			0	FFh
		7	R/W	Parity Error. When PS/2 protocol has a parity error, this bit will be set to high. This bit is also used as port indicator for PS/2 active multiplexing mode.		
		6	R/W	TimeOut. When PS/2 protocol has a timeout error, this bit will be set to high. This bit is also used as port indicator for PS/2 active multiplexing mode.		
		5	R/W	Auxiliary Data Flag		
		4	RO	Uninhibited		
		3	RO	Address (A2)		
		2	RO	System Flag		
		1	R/WC1	**IBF**, write **IBF** = 1 to clear **IBF**		
		0	R/WC1	**OBF**, write **KBCDAT** will set **OBF** to 1. Write **OBF** = 1 to clear **OBF**		

4.4 PWM

Copyright©2006, ENE Technology Inc.

4.4.1 PWM Functional Description

There are 5 PWM channels with 8-bit resolution.

PWM2,3,4 are controlled by the same configuration register in PWMCFG2 with 6 bit clock prescaler.

The PWM Cycle Length defines the PWM cycle time in setting clock source. The PWM High Period Length defines the PWM pulse high period length, should be less than Cycle Length

.

Here is the formula of PWM duty cycle.

Duty Cycle = (PWM High Period Length+1)/(PWM Cycle Period Length+1) *100%

Please note the following case:

Condition	PWM Output
H > C	Always 1 (High)
H and C=0x00	Always 1 (High)
H=0x00, C=0xFF	A short pluse
H=0xFF, C=0x00	Always 1 (High)

1. Where **H** means High Period Length (PWMHIGH) ; **C** means Cycle Period Length (PWMCYCL)
   Please refer to the following PWM register description.
2. To force PWM output Low, please force this pin to be GPIO mode and output low.

4.4.2 PWM Registers Descriptions (Base address_FE00h, 16 bytes)

Offset	Register Abbreviation	Register Full Name			Def	Bnk
		Bit	Attr	Description		
0	PWMCFG	PWM Configuration			0	FE
		7~6	R/W	PWM1 clock source selection 0: 1us 1: 64us 2: 256us 3: 4ms	0	
		5	RSV		0	
		4	R/W	PWM1 Enable	0	
		3~2	R/W	PWM0 clock source selection 0: 1us 1: 64us 2: 256us 3: 4ms	0	
		1	RSV		0	
		0	R/W	PWM0 Enable	0	
1	PWMHIGH0	PWM0 High Period Length			0	FE
		7~0	R/W	The High Period Length of PWM should be small than Cycle Length.	0	
2	PWMCYCL0	PWM0 Cycle Length			0	FE
		7~0	R/W	The Cycle Length of a PWM cycle, includes high and low Length.		
3	PWMHIGH1	PWM1 High Period Length			0	FE
		7~0	R/W	The High Period Length of PWM should be small than Cycle Length.	0	
4	PWMCYCL1	PWM1 Cycle Length			0	FE
		7~0	R/W	The Cycle Length of a PWM cycle, includes high and low Length.		
5 6 7	PWMCFG2 PWMCFG3 PWMCFG4	PWM Configuration 2, 3, 4			0	FE
		7	R/W	PWM2, 3, 4 Enable		
		6	R/W	PWM prescaler Clock Select 0: peripheral clock(by clock setting in EC CLKCFG(FF0Dh) 1: 1MHz clock(recommend set this bit to fixed clock in different clock setting)		

		5~0	R/W	The 6-bit prescaler for PWM by selected clock.		
8 9 A	PWMHIGH2 PWMHIGH3 PWMHIGH4	PWM2, PWM3, PWM4 High Period Length			0	FE
		7~0	R/W	High byte (8 bits)		
B C D	PWMCYC2 PWMCYC3 PWMCYC4	PWM2, PWM3, PWM4 Cycle Length			0	FE
		7~0	R/W	High byte (8 bits)		

4.5 GPT

4.5.1 GPT Functional Description

There are 4 GPTs in KB3700. 2 GPTs are 16-bit, and the other 2 are 8-bit. ALL base on 30.516 us (32.768KHz) clock, and are independent on clock setting in EC register.

GPT0 and GPT1 are 8-bit timer.

GPT2 and GPT3 are 16-bit timer.

4.5.2 GPT Register Descriptions (Base address = FE50h, 16 bytes)

Offset	Register Abbreviation	Register Full Name			Def	Bnk
		Bit	Attr	Description		
50	GPTCFG	GPT Configuration			0	FE
		7~5	RSV			
		4	R/W	GPT test mode, the GPT base clock will be system clock		
		3	R/W	Enable GPT3 counting and GPT3 interrupt		
		2	R/W	Enable GPT2 counting and GPT2 interrupt		
		1	R/W	Enable GPT1 counting and GPT1 interrupt		
		0	R/W	Enable GPT0 counting and GPT0 interrupt		
51	GPTPF	GPT Pending Flag			0	FE
		7	WO	GPT3 write 1 to restart	0	
		6	WO	GPT2 write 1 to restart		
		5	WO	GPT1 write 1 to restart		
		4	WO	GPT0 write 1 to restart		
		3	R/WC1	GPT3 Interrupt Pending Flag		
		2	R/WC1	GPT2 Interrupt Pending Flag		
		1	R/WC1	GPT1 Interrupt Pending Flag		
		0	R/WC1	GPT0 Interrupt Pending Flag		
53	GPT0	GPT0 Count Value				FE
		7~0	R/W	After GPT0 reach this value and interrupt will occur and GPT0 reset and counting from zero again.	0 0	
55	GPT1	GPT1 Count Value				FE
		7~0	R/W	After GPT1 reach this value and interrupt will occur and GPT1 reset and counting from zero again.	0 0	
56 57	GPT2H GPT2L	GPT2 Count Value				FE
		7~0	R/W	After GPT2 reach this value and interrupt will occur and GPT2 reset and counting from zero again.	0 0	
58 59	GPT3H GPT3L	GPT3 Count Value				FE
		7~0	R/W	After GPT3 reach this value and interrupt will occur and GPT3 reset and counting from zero again.	0 0	

Copyright©2006, ENE Technology Inc.

4.6 SPI/ISP Device Interface

4.6.1 SPI/ISP Functional Description

SPI includes several functions, as follows,

1. 2 code segments for 8051.
2. Performance improvement: instruction sustain fetch, and pre-fetch
3. flash write protection
4. ISP should be enabled by hardware trap pin during hardware reset.
   1. The ISP packet format: If bit 7th of 1st byte is 1 means write packet, otherwise means read.
      1. **ISP write** : [1000_XXXX] [WDATA]
      2. **ISP read** : [0000_XXXX] [RDATA]

4.6.2 SPI Registers Descriptions (Base address = FE70h, 16 bytes)

Offset	Register Abbreviation	Register Full Name			Def	Bnk
		Bit	Attr	Description		
A0h	**XBISEG0**	**8051 Address Segment 0 (0000h-3FFFh) Mapping Configuration**			0	FEh
		7	R/W	Enable 8051 Code Space SEG0 Remapping		
		5~0	R/W	XBI address = **XBISEG0***16k + 8051 address [13:0]		
A1h	**XBISEG1**	**8051 Address Segment 1 (4000h-7FFFh) Mapping Configuration**			0	FEh
		7	R/W	Enable 8051 Code Space SEG1 Remapping		
		5~0	R/W	XBI address = **XBISEG1***16k + 8051 address [13:0]		
A4h	**XBIXIOEN**	**XBI XIO Enable**			0	FEh
		7~0	R/W	Enable related XIO channel **(Only 4 channels)**		
A5h	**XBICFG**	**XBI Configuration**			07h	FEh
		7	R/W	Enable XBI BUS IO buffer pull up		
		6	R/W	Enable 8051 sustain instruction fetch		
		4	RO	Enable WR# to flash		
		3	R/W	Enable extend SELMEM# and SELE51# 1 clock for RD# and WR# setup and hold time.		
		2-0	R/W	RD# and WR# command clock count= [2:0]		
A6h	**XBICS**	**XBI E51CS# Configuration**			04h	FEh
		7	R/W	Enable E51CS# address 16~64K		
		6	R/W			
		5	R/W			
		4	R/W	**Enable Reset 8051 and XBI Segment Setting (XBISEG0~3)** reset XBI registers A0~A3h(bank select) when WDT / Wakeup / EC Register reset 8051.		
		3	RSV			
		2	R/W	Enable STOP and IDLE state let XBI state machine go to initial state.		
		1	R/W	**Enable EHB Fast Access** A enhanced option to speed up EHB performance.		
		0	R/W	Select XIO select to SELIO# (set 1) or SELIO2# (set 0).		
A7h	**XBIWE**	**XBI Write Enable**			0	FEh
		7-0	WO	Write 00h to reset all rest mode. Write A3h to enable flash write cycles. Write C5h to SRAM test.		
A8h A9h AAh	**SPIA0** **SPIA1** **SPIA2**	**XBI SPI Flash Address**			0	FEh
		7-0	R/W	SPIA0 = A7~0 SPIA1 = A15~8 SPIA2 = A22~16		
ABh	**SPIDAT**	**XBI SPI Flash Output / Input Data**			0	FEh
		7-0	R/W	Output(write SPIDAT) / Input(read SPIDAT) data to/from SPI flash interface.		
ACh	**SPICMD**	**XBI SPI Flash Command**			0	FEh

		7-0	R/W	The issued SPI command to SPI flash chip. The write to this register will start the SPI accessing, so that the SPIA2~0 and SPIDAT should be ready before SPICMD is written. **SPICMD support command :** 01h Write Status Register 02h Byte Program 03h Read 04h Write Disable 05h Read Status Register 06h Write Enable 0Bh High Speed Read 20h Sector Erase (SST) 50h Enable Write Status Register (SST) 52h Block Erase (SST) 60h Chip Erase (SST) C7h Chip Erase (PCM, NexFlash) D7h Sector Erase (PCM) D8h Block Erase (PCM, NexFlash)		
ADh	**SPICFG**	**SPI Flash Configuration / Status**			00	FEh
		7	R/W	**Enable DPLL for ISP mode**		
		6	R/W	**SPI Flash Offset Read Command Enable. (32h)**		
		5	R/W	**SPI Flash Short Read Command Enable. (31h, 30h)** A23~16 will not be used. A16 = 1 if 31h command. A16=0 if 30h command. The address phase will only contain A15~0, and don't care fast mode enable bit of SPICFG bit 2.		
		4	R/W	**SPICS# force output low.** After set this bit, the protocol will control by firmware. The SPICMD will output to SPI BUS each time the write operation to SPICMD. The SPIDAT will store the read operation data from SPI BUS.		
		3	R/W	**SPICMD write enable.** Enable SPICMD write action to start SPI flash protocol accessing.		
		2	R/W	**Enable SPI Flash Dummy Byte for Read Command.** Enable SPI flash read by 8051 instruction by **Fast Mode (High Speed Read) 0Bh command**.		
		1	RO	**SPI flash accessing in progress status.** Use this bit to check if the SPI accessing is finished or not.		
		0	R/W	Enable SPICMD follow with a SPI status check until Busy flag cleared.		
AEh	**SPIDATR**	**SPI Flash Output Data for Read Compare**			0	FEh
		7-0	RO	Output data to SPI flash interface.		
AFh	**SPICFG2**	**SPI Flash Configuration 2**			0	FEh
		7-4	RSV	Reserved.		
		3-0	R/W	SPI Offset / Short Read Command high nibble.		

4.6.3 ISP Registers Descriptions (8 bytes)

Offset	Register Abbreviation	Register Full Name			Def
		Bit	Attr	Description	
0 1 2	**ISPIA0** **ISPIA1** **ISPA2**	**ISP SPI Flash Address**			0
		7-0	R/W	SPIA0 = A7~0 SPIA1 = A15~8 SPIA2 = A22~16	
3	**ISPDAT**	**ISP SPI Flash Output / Input Data**			0
		7-0	R/W	Output(write SPIDAT) / Input(read SPIDAT) data to/from SPI flash interface.	
4	**ISPCMD**	**ISP SPI Flash Command**			0

		7-0	R/W	The issued SPI command to SPI flash chip. The write to this register will start the SPI accessing, so that the SPIA2~0 and SPIDAT should be ready before SPICMD is written. **SPICMD support command :** 01h Write Status Register 02h Byte Program 03h Read 04h Write Disable 05h Read Status Register 06h WriteEnable 0Bh High Speed Read 20h Sector Erase (SST) 50h Enable Write Status Register (SST) 52h Block Erase (SST) 60h Chip Erase (SST) C7h Chip Erase (PCM, NexFlash) D7h Sector Erase (PCM) D8h Block Erase (PCM, NexFlash)	
5	**ISPCFG**	**ISP SPI Configuration / Status**			0
		7 ~ 5	R/W		
		4	R/W	SPICS# force output low. After set this bit, the protocol will control by firmware. The SPICMD will output to SPI BUS each time the write operation to SPICMD. The SPIDAT will store the read operation data from SPI BUS.	
		3	R/W	SPICMD write enable. Enable SPICMD write action to start SPI flash protocol accessing.	
		2	R/W	SPI flash read by 8051 instruction by **Fast Mode (High Speed Read) 0Bh** protocol.	
		1	RO	SPI flash accessing in progress status. Use this bit to check if the SPI accessing is finished or not.	
		0	R/W	Enable SPICMD follow with a SPI status check until Busy flag cleared.	
6	**ISPDATR**	**ISP SPI Flash Output Data for Read Compare**			0
		7-0	RO	Output data to SPI flash interface.	
7	ISPSCON3 ***	ISP SPI ISP RS232 Baud Rate Setting			
		7-0	WO	In ISP mode, 8051_SFR(SCON2) always 0 write this reg to program 8051_SFR(SCON3) Default: SCON3 = 0x89, baud-rate = 57600 (while 8051 clk = 8Mhz) set SCON3 = 0x45 for baud-rate =115200 (while 8051 clk = 8Mhz)	0
		7~4	RSV	Reserved	3
		3~0	RO	SPI Offset / Short Read Command high nibble.	

*** Please note, ISPSCON3 register gives different bitmap definition according to access. For write operation, please refer to the yellow part, and read operation please refer to the green part.

4.7 WDT

4.7.1 WDT Functional Description

WDT timer clock uses 32.768 KHz oscillator clock and base unit is 64ms.
WDT register can only be reset by power on reset and ECRST#.

WDT range is between 64 ms to 16 seconds.
WDT reset time is between 128ms to 32 seconds.

WDT reset can reset all logic in the chip, except GPIO registers. Thus, the GPIO setting can be preserved after WDT reset occurred. The WDT reset can optionally be set only to reset 8051 logic in EC register space.

4.7.2 WDT Registers Descriptions (Base address = FE80h, 16 bytes)

Offset	Register Abbreviation	Register Full Name			Def	Bnk
		Bit	Attr	Description		
80	**WDTCFG**	**WDT Configuration**			0	FE
		7	R/W	**WDT Extended Bits Enable** 0: WDT is 20-bit timer (normal setting). 1: WDT is 24-bit timer (setting for PLLLOW in STOP mode). If EC **CLKCFG**.7 (PLLLOW Enable) is set, the WDT clock will become PLL output clock automatically. Set this bit to 1 before enter STOP mode to let WDT become 24-bit timer by 1~2MHz PLL output clock.		
		6~3	R/W	Force to disable WDT by writing 1001b to this field. Write 1011b to set WDT be shorter timer. (Enable WDT shorter test mode). Write 1111b to disable WDT shorter test mode.		
		2	R/W	**WDT Clock Selection for testing** 0: WDT clock is from **WDT Clock Selection 2** (normal setting). 1: WDT clock is PLL output / 2 (i.e. 16MHz as PLL output 32MHz, maybe stopped at STOP mode. This option is only for testing).		
		1	R/W	Enable WDT interrupt (WDT reset warning)		
		0	R/W	Enable WDT reset, and reset WDT timer, the WDT timer and 2 pending flags will be reset and count from zero again. If the WDT and reset after a interrupt occurred, the next interrupt will occurred after 16 seconds.		
81	**WDTPF**	**WDT Pending Flag**			0	FE
		7~5	RSV			
		1	R/WC1	WDT interrupt pending, WDT half timeout flag. If this bit is set, the following WDT timeout event will cause a WDT reset signal to system.		
		0	R/WC1	WDT reset event pending flag (the last WDT reset was ever happened), WDT reset will assert if WDT count to WDT and WDT interrupt is pending.		
82	**WDTCNT**	**WDT 8-bit Count Value (for Watch Dog Timer reset system)**			0	FE
		7~0	R/W	After WDT counts to this value the half of WDT/2 , the interrupt will occur. The WDT timer unit is 64ms.		
83 84 85	**WDT19_12** **WDT11_04** **WDT03_00**	**WDT Counter Value(for testing)**			0	FE
		0	RO	Only for WDT testing.		

4.8 LPC

4.8.1 LPC / FWH Functional Description

There are 5 address ranges on LPC/FWH interface will be responded by KB3700 EC.

1. Keyboard controller I/O ports: 60h, 64h
2. Embedded controller I/O ports: 2 programmable I/O ports (default 62h/66h and 68h/6Ch)
3. EC I/O Index and Data Ports: Through which the system host can access KB3925 internal registers more efficiently than through EC commands F0h/F1h. The EC I/O Index and Data Ports are two 8-bit registers with base address defined in FE92h and FE93h. Default Index Port ={002Dh, 002Eh}, Data port =002Fh.
4. LPC/FWH memory access.
5. Extended LPC write byte: can be programmed to port 80 and generate interrupt to 8051.

4.8.1.1 LPC Decoding IO Ports

The keyboard I/O ports are 60h/64h, while the EC I/O ports are programmable in **LPCEBA** (FE98h, FE99h). The enable/disable of I/O ports decoding on LPC bus can be configured individually via register **LPCCFG** (FE95h).

4.8.1.2 LPC Decoding Memory Space

Memory Setting (LPCFWH bit 7,6)	Memory Size	Decoded BIOS Address
00	256k (default)	000C_0000 – 000F_FFFF FFFC_0000 – FFFF_FFFF
01	512k	000C_0000 – 000F_FFFF FFF8_0000 – FFFF_FFFF
10	1M	000C_0000 – 000F_FFFF FFF0_0000 – FFFF_FFFF
11	2M	000C_0000 – 000F_FFFF FFE0_0000 – FFFF_FFFF

4.8.2 LPC Registers Descriptions (Base address = FE90h, 16 bytes)

Offset	Register Abbreviation	Register Full Name			Def	Bnk
		Bit	Attr	Description		
90h	LPCSTAT	LPC Status (Internal Use Only)			0	FEh
		7~2	RSV			
		1	R	LPC SIRQ is current in quiet/continuous mode 1: quiet mode 0: continuous mode		
		0	RSV			
91h	LPCSIRQ	LPC SIRQ Configuration			0	FEh
		7	R/W	Enable don't care A22 of FWH memory cycle		
		6	R/W	Enable SCI SIRQ		

		5	R/W	Enable IRQ12 SIRQ		
		4	R/W	Enable IRQ1 SIRQ		
		3 – 0	R/W	SCI Serial IRQ channel 0: no 1:IRQ1 2:SMI# 3:IRQ3 … 15:IRQ15		
92h 93h	**LPCIBAH LPCIBAL**	**LPC Index IO Base Address**			FFh 2Ch	FEh
		7 – 0	R/W	EC index mode IO port base address. The address should be 4 bytes align.		
94h	**LPCFWH**	**LPC FWH Configuration**			0	FEh
		7 – 6	R/W	Memory Size (both for LPC Memory and FWH) 00: 256KB 01: 512KB 10: 1MB 11: 2MB	0	
		5	R/W	Enable FWH memory cycle		
		4	R/W	Enable FWH IDSEL check		
		3 – 0	R/W	FWH ID		
95h	**LPCCFG**	**LPC Configuration**			80h	FEh
		7	R/W	Enable LPC memory write protection (including FWH)		
		6	R/W	Enable index IO port		
		5	R/W	Enable KBC IO port: 60h, 64h		
		4	R/W	Enable Extended IO port (IO write only)		
		3	R/W	Enable EC IO port		
		2	R/W	Enable LPC memory cycle (not including FWH)		
		1	R/W	Enable SIRQ fixed in continuous mode		
		0	R/W	Enable LPC CLKRUN#		
96h 97h	**LPCXBAH LPCXBAL**	**LPC Extended IO Base Address**			00h 80h	FEh
		Only LPC byte write is supported				
98h 99h	**LPCEBAH LPCEBAL**	**LPC EC IO Base Address**			00h 62h	FEh
		LPCEBAL bit 0 and bit 1 are not ignored for decoding				
9Ah	**LPC_2EF**	**Address 2EF decoding and control in LPC(Internal Use Only)**			B0h	FEh
9Ah	**LPC_2EF**	**Address 2EF decoding and control in LPC(NOTE: Internal Use Only)**				
		7~4	RSV			
		3	R	Decode IO(0x002F): 0:read_io_2f, 1:write_io_2f		
		2	R/RW	Decode IO(0x002F) r/w cycle, should cleared by FW Write 1 to clear the value.		
		1	R/W	Enable interrupt of read/write_io(2f)		
		0	R/W	Enable decode read_io(2e), read/write_io(2f)		
9Bh						
		7~0	RSV			
9Ch	**LPC_2F_DATA**	**LPC_2F_DATA**				
		7~0	RO	Read data for read_cycle_IO(2F)		
9Dh	**LPC68CFG**	**LPC 68/6Ch IO Configuration**			0	
		7	R/W	Enable LPC I/F decode IO 68h, 6Ch		
		6~2	RSV			

		1	R/W	IBF Interrupt Enable		
		0	R/W	OBF Interrupt Enable		
9Eh	**LPC68CSR**	**LPC 68h IO Command Status Register**				
		7	RO	**IO68/6Ch Busy Flag.** The host is accessing the 68/6Ch IO. If this bit is set, the software doesn't get the right of the 68/6Ch. This flag can be clear by write 6Ch = FFh.		
		6	RO	A2 (address bit 2) of the last write 68/6C IO.		
		5~4				
		3	R/WC1	IBF Interupt Pending Flag		
		2	R/WC1	OBF Interrupt Pending Flag.		
		1	R/WC1	IBF		
		0	R/WC1	OBF		
9Fh	**LPC68DAT**	**LPC 6Ch IO Data Register**			0	FEh
		7-0	R/W	The data byte of current memory cycle.		

4.9 PS / 2 Interface

4.9.1 PS/2 Functional Description

The PS2 Controller supports byte-level programming interface to PS2 devices, including IKB module. A PS/2 TX action will be pending if a PS/2 RX is active. After PS/2 RX is completed (received a byte), the TX will start transmitting to the specified port. PS2 Controller will maintain the PS2 channel's integrity in byte level. But the input signal should not be floating not drive low if the PS2 channel is not used (MUST set correct **GPIOFS** and **PS2CFG** Enable PS2 ports).

4.9.2 PS2 Registers Descriptions (Base Address = FEE0h, 32 bytes)

Offset	Register Abbreviation	Register Full Name			Def	Bnk
		Bit	Attr	Description		
E0	**PS2CFG**	**PS2 Configuration**			0	FE
		7	RSV		0	
		6	R/W	Enable PS2 port 2(TX/RX), disable will let PSCLK2 in low state	0	
		5	R/W	Enable PS2 port 1(TX/RX), disable will let PSCLK1 in low state	0	
		4	RSV		0	
		3	R/W	Enable interrupt of PS2 parity error	0	
		2	R/W	Enable interrupt of PS2 TX timeout (clock >180us or request > 100ms)	0	
		1	R/W	Enable interrupt of PS2 transmitted byte	0	
		0	R/W	Enable interrupt of PS2 received byte	0	
E1	**PS2PF**	**PS2 Pending Flag**			0	FE
		7	RSV		0	
		6	RO	Received Byte Port is PS2 port 2	0	
		5	RO	Received Byte Port is PS2 port 1	0	
		4	RSV		0	
		3	R/WC1	Interrupt Pending Flag of PS2 parity error	0	
		2	R/WC1	Interrupt Pending Flag of PS2 TX timeout	0	
		1	R/WC1	Interrupt Pending Flag of PS2 transmitted byte	0	

Copyright©2006, ENE Technology Inc.

		0	R/WC1	Interrupt Pending Flag of PS2 received byte, Clear this bit will also clear bit 4~7 and RX timeout flag for receiving next byte from a PS/2 device.	0	
E2	**PS2CTRL**	**PS2 Transmitter / Receiver Control**			0	FE
		~~7~~	RSV		0	
		6	R/W	Transmit Byte Port is PS2 port 2	0	
		5	R/W	Transmit Byte Port is PS2 port 1	0	
		4	RSV		0	
		3	WO	Write 1 to force reset PS2 transmitter state, for emergency usage.	0	
		2	WO	Write 1 to force reset PS2 receiver state, for emergency usage.	0	
		1	RO	Flag of PS2 RX timeout	0	
		0	R/W	Enable PS2 transmit data port, This bit should be set for transmitting a byte (write to PS2DATA) to a device.	0	
E3	**PS2DATA**	**PS2 DATA**			0	FE
		7~0	R/W	Write to start a byte transmitting to a PS2 device, and clear previous state. Read to get the data of received byte for a PS2 device.	0	
E4	**PS2CFG2**	**PS2 Configuration 2**				
		7-2	RSV	Reserved.		
		1	R/W	**PS2 protocol waiting time enable** 1. Wait 16 us after PS/2 bus is idle (clock-high,data-high), when PS/2 module transmits the command to divice. 2. In the protocol of PS/2 module to device, the clock is low first then the data waits 16 us to be low.		
		0	R/W	**PS2CLK / PS2DAT input debounce enable. (**0: 1 us; 1: 2 us)		
E5	**PS2PINS**	**PS2 Pin Input Status**				
		7	RSV			
		6	R/W	PS2 Port 2 Clock		
		5	R/W	PS2 Port 1 Clock		
		4	RSV			
		3	RSV			
		2	R/W	PS2 Port 2 Data		
		1	R/W	PS2 Port 1 Data		
		~~0~~	RSV			
E6	**PS2PINO**	**PS2 Pin Output**				
		7	RSV			
		6	R/W	PS2 Port 2 Clock		
		5	R/W	PS2 Port 1 Clock		
		4	RSV			
		3	RSV			
		2	R/W	PS2 Port 2 Data		
		1	R/W	PS2 Port 1 Data		
		0	RSV			

Copyright©2006, ENE Technology Inc.

4.10 EC

4.10.1 EC Functional Description

There are 7 parts in EC:

- Hardware EC Commands
- EC Index IO mode
- EC Extended IO Write
- SCI Generation
- Misc functions

4.10.1.1 Hardware EC Commands

EC standard commands as described in ACPI 2.0 spec. are processed by hardware logic directly without the intervention of firmware. For EC extended commands, EC controller will forward them to 8051 and thereby processed by the firmware. The data and command/status ports are default to 62h and 66h respectively, and can be optionally mapped to other I/O address space by KBC command 61h.

4.10.1.2 EC Status Register

To read EC Status IO port register is described as follows:

Status Bit	Name	Description
7	Reserved	Not used.
6	Reserved	Not used.
5	**SCI**	This bit is set to 1 by the EC to indicate that there is/are a/more **SCI** event(s) in the **SCI** queue. The system upon detecting this bit being set should thereafter query the **SCI** event queue (by issuing EC command 84h) to obtain the **SCI** ID number. EC standard commands (80h,81h,82h,83h,84h) being received and completed by the EC will not cause the **SCI** bit to be set.
4	**Burst Enable**	The Burst Enable flag. 1=Enabled. 0=Disabled.
3	**Command or Data Flag**	1=Previous access port is command port (**EC_CMD/EC_STS**). 0=Previous access port is data port (**EC_DAT**).
2	Reserved	Not used.
1	**IBF**	Input Buffer Full flag.
0	**OBF**	Output Buffer Full flag.

4.10.1.3 EC Command Register

There are 7 valid EC Commands for EC command register (write IO 66h); other values are **"don't care"** by EC if being written.

Value	Command	Description
80h	EC Read	Read operation for an internal register in EC Space.
81h	EC Write	Write operation for an internal register in EC Space.
82h	EC Burst Enable	Enable EC burst operation mode.
83h	EC Burst Disable	Disable EC burst operation mode.
84h	EC Query	Query the SCI event queue.
Others	Firmware Command	No responded from hardware EC. Firmware EC commands.

Copyright©2006, ENE Technology Inc.

4.10.1.4 EC Command Program Sequence

Command Byte	Command Name	Programming Sequence
80h	**Read EC**	Write **EC_CMD** with 80h (66h=80h) Wait **SCI** for **IBF**=0 Write address byte to **EC_DAT** (62h=EC address) Wait **SCI** for **OBF**=1 Read **EC_DAT** with data in (read data = 62h)
81h	**Write EC**	Write **EC_CMD** with 81h (66h=81h) Wait **SCI** for **IBF**=0 Write address byte to **EC_DAT** (62h=EC address) Wait **SCI** for IBF=0 Write data byte to **EC_DAT** (62h = write data) Wait **SCI** for **IBF**=0
82h	**Burst Enable**	Write **EC_CMD** with 82h (66h=82h) Wait **SCI** for **OBF**=1 Read **EC_DAT** with 90h(Burst ACK)
83h	**Burst Disable**	Write **EC_CMD** with 83h (66h=83h) Wait **SCI** for **IBF**=0
84h	**Query EC**	Write **EC_CMD** with 84h (66h=84h) Wait **SCI** for **OBF**=1 Read **EC_DAT** with SCI ID number (read data = 62h).

4.10.1.5 EC Index IO Mode

You may use EC Index IO mode to access the KB3925 register space (F400h ~FFFFh). The EC Index IO base is set in LPC register FE92h, FE93h. The base address + 1 is index high byte address. The base address + 2 is index low byte address. The base address + 3 is data port for reading from or writing to KB3925 internal register space. For example, set the base address in FE92h=00h, FE93h = 2Ch. The system IO write set 002Dh = FFh, 002Eh = 01h. The read / write to 002Fh will read / write **ECFV** register (FF01h).

4.10.1.6 SCI Generation

Most interrupts generated from KB3925 internal modules are connected to the 8051 core and are optionally to generate a SCI event. Each SCI has an associated SCI Enable and SCI Flag bits in EC Space 05h~0Ah. The three extended interrupt ports of 8051, each supporting 8 interrupt channels, can accommodate totally 24 interrupt channels. The pulse-width of SCI is adjustable by setting **SCICFG** (default is low-active with 250ns pulse-width). Setting **ECCFG** bit 0=1 (default=0, enabled) to disable the generation of SCI.

In addition to the 24 SCI events generated by KB3925 internal hardware logic, 8051 firmware or system BIOS can also generate a SCI event by writing the desired SCI ID into **SCID** register (0Bh) in EC space. The **SCID** should be first enabled in **ECCFG** bit3. The SCI IDs are defined as follows.

Copyright©2006, ENE Technology Inc.

4.10.1.7 SCI ID Table

SCI ID	Name	PxI	Description	Priority
00	**Nothing**	**N.A.**	Indicates a EC Command is received from the Host. Alternatively also means nothing happens	**Highest**
01h		**N.A.**		
02h		**N.A.**		
03h		**N.A.**		
04h		**N.A.**		
05h		**N.A.**		
06h~07		**N.A.**	Not used.	
08h	**WDT**	**P0I.0**	Indicates a Watchdog Timer event.	
09h	**RSV**	**P0I.1**		
0Ah	**PS2**	**P0I.2**	Indicates a PS2 event.	
0Bh	**KBC**	**P0I.3**	Indicates a KBC Host Interface event.	
0Ch	**RSV**	**P0I.4**		
0Dh	**LPC**	**P0I.5**	LPC cycle interrupt	
0Eh	**ECFW**	**P0I.6**	EC firmware mode SCI (IBF/OBF SCI).	
SCID	**SCID**	**P0I.7**	Write **SCI** ID, Query value is SCID.	
10h	**RSV**	**P1I.0**		
11h	**RSV**	**P1I.1**		
12h	**RSV**	**P1I.2**		
13h		**P1I.3**	Not used.	
14h	**GPT0**	**P1I.4**	Indicates a General Purpose Timer 0 event.	
15h	**GPT1**	**P1I.5**	Indicates a General Purpose Timer 1 event.	
16h	**GPT2**	**P1I.6**	Indicates a General Purpose Timer 2 event.	
17h	**GPT3**	**P1I.7**	Indicates a General Purpose Timer 3 event.	
18h	**EXTWIO**	**P3I.0**	Indicates a Write Extended IO interrupt (Port80).	
19h	**GPIO00~0F**	**P3I.1**	Indicates a **GPIO00~0F** event.	
1Ah	**GPIO10~1B**	**P3I.2**	Indicates a **GPIO10~1B** event.	
1Bh	**RSV**	**P3I.3**		
1Ch	**RSV**	**P3I.4**		
1Dh	**RSV**	**P3I.5**		
1Eh	**RSV**	**P3I.6**		
1Fh	**ADC**	**P3I.7**	Indicates a **ADC** updated event.	

4.10.2 EC Register Descriptions (Base Address = FF00h, 32 bytes)

Offset	Register Abbreviation	Register Full Name			Def	Bnk
		Bit	Attr	Description		
00h	ECHV	EC Hardware Revision ID			A0	FFh
		7 – 0	RO	ECHV contains the current hardware version.		
01h	ECFV	EC Firmware Revision ID			0	FFh
		7 – 0	R/W	ECFV is written by the 8051 firmware with its current firmware version for system software's recognition. ADC test data input when ADC test enable.		
02h	ECHA	EC High Address			F	FFh
		7~4	RSV			

		3 – 0	R/W	High-byte address of the 64KB EC address space. Used for standard EC commands to access F000~FFFFh internal space. The default setting will let host accessing the FF00~FFFFh (EC, GPWU, SMBus) space.		
03h	SCICFG	SCI Configuration			90	FFh
		7	R/W	Enable the generation of SCI by standard EC commands (default enable)		
		6	R/W	Enable SCID port (Firmware generated SCI).		
		5	R/W	EC SCI pulse polarity; =0, low active; (default); =1, high active.		
		4	R/W	Enable EC SCI (set 1) from SCIIFx, default is enabled.		
		3 – 0	R/W	SCI pulse width = SCIPW x 64us, max length = 1 ms, as no width=0. IF width = 0, the pulse width will be a system clock.		
04h	ECCFG	EC Configuration			0	FFh
		7	R/W	Enable EPB Fast Access A enhanced option to speed up EPB performance during accessing.		
		6	R/W	Test mode. Must be programmed to 0 for normal operation.		
		5	R/W	Enable hardware EC Read/Write command		
		4	R/W	Enable hardware EC Burst Enable/Disable command		
		3	R/W	Enable hardware EC Query command		
		2	R/W	Enable Extended IO port Interrupt to 8051		
		1	R/W	IBF Interrupt Enable, also be the Firmware Mode Enable. This bit enables KBC to generate interrupt to the 8051 at the rising edge of IBF, when the KBC command being received will be bypassed to firmware for processing.		
		0	R/W	OBF Interrupt Enable. This bit enables KBC to generate interrupt to the core processor at the falling edge of OBF.		
05h 06h 07h	SCIE0 SCIE1 SCIE3	EC SCI P0, P1, P3 Interrupt Enable			0	FFh
		7 – 0	R/W	Enable extended 8051 Port 0, 1, 3 Interrupt to SCI		
08h 09h 0Ah	SCIF0 SCIF1 SCIF3	EC SCI P0, P1, P3 Interrupt Flag			0	FFh
		7 – 0	R/WC1	Flags for extended 8051 Port 0, 1, 3 Interrupt to SCI. EC Query will clear the query SCI ID flag automatically, or write 1 to clear		
0Bh	SCID	EC SCI ID Write Port for 8051 firmware to generate SCI event			0	FFh
		7 – 0	R/W	8051 firmware can write to this port with SCI_ID value to generate a SCI event. The host can use EC Query command to read this specified value.		
0Ch	PMUCFG	PMU Control / Configuration			2F	FFh
		7	WO	Enter STOP mode by writing this bit = 1, the same as 8051 PCON STOP		
		6	WO	Enter IDLE mode by writing this bit = 1, the same as 8051 PCON IDLE		
		5	R/W	Enable LPC cycle wake up from STOP mode.		
		4	R/W	MUST be set to '1' to enable wakeup feature.		
		3	R/W	Enable SCI to be one of wake up interrupt source 8051 interrupt source will always exit Ultra Low clock to normal clock		
		2	R/W	Enable Watchdog interrupt wake up from STOP mode		
		1	R/W	Enable GPWU wake up from STOP mode		
		0	R/W	Enable Interrupt wake up from IDLE mode		
Offset	Register Abbreviation	Register Full Name			Def	Bnk
		Bit	Attr.	Description		
0Dh	CLKCFG	Clock Configuration			00h	FFh
		7	R/W	Enable PLL enter low speed state in STOP mode. Set PLL frequency control value to be PLLLOW in STOP mode. The CLKCFG bit 4 should also be enabled for this option.		
		6	R/W	Flash (SPI) Interface Clock Control 1: full speed (Internal clock is 66(+-%25) MHz) 0: half speed (default, ½ of supplied clock) SPI clock is 16MHz if CLKCFG set to 8 / 4 MHz. SPI clock is stopped when 8051 in IDLE if CLKCFG.0 is set.		
		5	R/W	Enable PLL to generate a good 32.768MHz. (default reset PLL) This bit should be set after PCICLK is stable.		

Copyright©2006, ENE Technology Inc.

		4	R/W	Enable PLL enter low power state in STOP mode		
		3-2	R/W	8051 / Peripherals Normal Run Clock Selection. 10: 22 / 8 MHz 01: 16 / 8 MHz 00: 8 / 4 MHz (default) The SPI clock is 16MHz in this setting. Clock rate is fixed in 2/1MHz when 8051 in IDLE if CLKCFG.0 is set. The flash interface (SPI or ISA) is fixed in 32.768 MHz or higher by CLKCFG.6 setting.		
		1	R/W	Enable Peripheral Auto Slow Clock Control to be 1 MHz. The Peripheral's clock will be 1 MHz when no host accessing.		
		0	R/W	Enable 8051 IDLE Mode Slow Clock Control to be 2 / 1 MHz. When 8051 enters IDLE state, the clock of 8051 and peripherals will changed automatically to 2 / 1 MHz. And the flash interface clock will be stop if this bit is set.		
0Eh	EXTIO	EC Extended Write IO data			0	FF
		7~0	R/W	Read this byte to get the host write extended IO data.		
0Fh	PLLCFG	PLL Configuration			70	FF
		7~0	R/W	PLLINIT (PLL Initial value) PLL initial value for output a default frequency. (070h)		
11h	RSV				0	FF
12h	CLKCFG2	Clock Configuration 2			1F	FF
		7 – 0	R/W	1 us time unit by PLL output clock. If PLL output 32MHz(default), the setting should be 32(1Fh) or 33(20h) for 1000 ns/30.518 = 32.76 . If PLL output 25MHz, the setting should be 24(18h) for 1000 ns/40 = 25.		
13h	PLLCFG2	PLL Configuration 2			11	FF
		7 – 6	R/W	PLLINIT High Bits (PLLINITH) High 2 bits of PLL frequency control initial value(PLLINIT). Combine with FF0Fh to be 10 bits frequency control value.		
		5	R/W	PLL Reference Selection 0: select PCI clock(LPC clock) as reference clock of PLL.(default) 1: select alternative clock source from GPIO02 Alt. input.		
		4	R/W	PLL Source Clock Divider 0: Disable 1: Enable (default) The PLL build-in a 1024(10-bit) divider for source clock.For PLL reference clock is high speed, as PCICLK, the divider should be enabled. For PLL reference clock is low speed, as 32KHz from GPIO02 Alt. Input, the divider should be disabled.		
		3 – 0	R/W	PLL Low Speed State Setting As Enable PLL enter low speed state in STOP mode, Use this value as PLL frequency control.		
14h	PXCFG	8051 on-chip Control			0	FF
		7~2	RSV			
		1	R/W	Enable WDT timeout only reset 8051 1: WDT timeout event only resets 8051. 0: The WDT timeout event resets whole chip (not including GPIO module)		
		0	R/W	Reset 8051 and 8051 internal peripherals(8051 serial port, timer, interrupt controller) . After reset, the 8051 will restart from reset vector if this bit is reset to '0'. Write '1' to reset 8051. Write '0' to restart 8051.		
Offset	Register Abbreviation	Register Full Name			Def	Bnk
		Bit	Attr	Description		
15h	ADDAEN	ADC/DAC Enable			0	FF
		7	R/W	Select converting ADC channel 5 (Valid in A1 Version only)		
		6	R/W	Select converting ADC channel 4 (Valid in A1 Version only)		

Copyright©2006, ENE Technology Inc.

		5~0	R/W	Enable ADC5~0		
16h	PLLFRH	PLL Frequency Register High byte			3E	FF
		7~0	R/W	32MHz clock count 32.768KHz value[11:4], default count 1000(PLLFRH, PLLFRL[7:4]=3E8h)		
17h	PLLFRL	PLL Frequency Register low byte			83	FF
		7~4	R/W	32MHz clock count 32.768KHz value[3:0]		
		3	R/W	Enable show PLL lock value in CHIP ID reg		
		2	R/W	Enable PLL logic from test mode clock for testing.		
		1~0	R/W	Set PLL frequency count don't care bits 0: all comparing 1: don't care bit 1 2: don't care bit 1~0 3: don't care bit 2~0		
18h	ADCTRL	ADC Control Register			0	FF
		7~5	RSV			
		4~2	R/W	Select converting ADC channel (ADC5~0) NOTE: ONLY Channel 3~0 is valid in A0 and A1 version. All these three bit need to set ZERO if channel 4 or 5 selected using ADDAEN.		
		1	R/W	ADC test mode		
		0	R/W	Start (write 1 action) ADC converter and Enable ADC converted interrupt		
19h	ADCDAT	ADC Data output port			0	FF
		7 – 0	RO	After ADC converted, the value is hold here.		
1Ah	ECIF	EC Interrupt Pending Flag			0	FF
		7~3	RSV			
		2	R/WC1	EC firmware mode in processing flag, Exit EC firmware mode and re-enable hardware mode by writing 1		
		1	R/WC1	IBF interrupt pending flag, as ECSTS IBF is set by host write		
		0	R/WC1	OBF interrupt pending flag, as ECSTS OBF is clear by host read ECDAT		
1Bh	ECDAT	EC Data port			0	FF
		7 – 0	R/W	The EC Data Port serves as the window between system host and EC. Write ECDAT will set ECSTS bit 0 (OBF) at the same time.		
1Ch	ECCMD	EC Command port			0	FF
		7 – 0	RO	This register stored the latest EC command from host writing EC command IO port. Normally, standard EC commands will be processed by EC hardware directly. For extended EC commands, 8051 firmware may handle the processing. The port is read-only by the EC.		
1Dh	ECSTS	EC Status port			0	FF
		7	R/W	Free r/w bit for host interface		
		6	R/W	Free r/w bit for host interface		
		5	RO	SCI pending flag		
		4	R/W	Burst Enable Status		
		3	RO	A2 (Command or Data Flag) =0, previous host write is Data =1, previous host write is Command		
		2	RSV			
		1	R/WC1	IBF, write IBF = 1 to clear IBF		
		0	R/WC1	OBF, write port ECDAT will set OBF to 1. Write OBF = 1 to clear OBF		
1E~1Fh	PLLVAL	15~0	RO	Chip Part No. / PLL lock value.		FF

Copyright©2006, ENE Technology Inc.

4.11 GPWU

4.11.1 GPWU Functional Description

Each GPIO with GPI pin can generate events (interrupt or wakeup). The GPI input can be set as **Level** or **Edge** trigger or **Change** trigger. **Polarity** bit setting will affect Level and Edge trigger, but it poses no meaning to Change trigger.

4.11.2 GPWU Register Descriptions (Base Address = FF30h, 96 bytes)

Offset	Register Abbreviation	Register Full Name			Def	Bnk
		Bit	Attr	Description		
30 31 32 33	**GPWUEN00** **GPWUEN08** **GPWUEN10** **GPWUEN18**	**GPIO Event Enable and Asynchronous Wake Up Enable**			0	FF
		7~0 3~0	R/W	Enable bit to generate event (interrupt, and wakeup) for a active input. Also Enable bit for waking up from STOP mode.		
40 41 42 43	**GPWUPF00** **GPWUPF08** **GPWUPF10** **GPWUPF18**	**GPIO Event Pending Flag**			0	FF
		7~0	R/WC1	GPIO00~1B Event Pending Flag		
50 51 52 53	**GPWUPS00** **GPWUPS08** **GPWUPS10** **GPWUPS18**	**GPIO Polarity Selection**			0	FF
		7~0 3~0	R/W	GPIO00~1B input active polarity selection 0: Low active (falling for edge trigger) 1: High active (rising for edge trigger)		
60 61 62 63	**GPWUEL00** **GPWUEL08** **GPWUEL10** **GPWUEL18**	**GPIO Edge / Level Trigger Selection**			0	FF
		7~0 3~0	R/W	GPIO00~1B input is edge or level trigger 0: Edge 1: Level		

4.12 8051 Microprocessor

The embedded 8051 is compatible with industrial standard 8051(or 8031). There are 3 standard 8051 peripherals, including the Interrupt controller, the Serial port and two 16-bit timers.

KB3700 extends the channels of Interrupt Controller in the original 8051 to 24 channels supporting internal peripheral devices. The Serial port use **SCON2** to achieve high speed serial transmission rate up to 115200 bps. The two 16-bit timers are basically the same as that in the standard 8051's, except when **SCON2** is used to generate high-speed baud rate. Under such circumstances the 2 timers will not be used for baud-rate generation but for other purposes.

The 8051 uses **MOVX** and **MOVC** instructions to read or write KB3925 peripherals, i.e., **EC, SMBus, GPIO, GPWU, KBC, IKB, GPT, PWM, PS2, XBI, LPC, XRAM**…etc.

Hereunder lists the differences between the KB3925's embedded 8051 and that of the industrial standard 8051:

4.12.1 Interrupt Vectors Table

Source	Vector Addr	Description	SCI ID	Priority
IE0	0003h	8051 external interrupt 0	01h	Highest

TF0	000Bh	8051 Timer 0	02h	Highest
IE1	0013h	8051 external interrupt 0	03h	Highest
TF1	001Bh	8051 Timer 1	04h	Highest
RI & TI	0023h	8051 Serial Port	05h	Highest
P0I.0	0043h	WDT	08h	High
P0I.1	004Bh	N.A.	09h	
P0I.2	0053h	PS/2	0Ah	
P0I.3	005Bh	KBC Host Interface interrupt	0Bh	
P0I.4	0063h	RSV	0Ch	
P0I.5	006Bh	LPC Interrupt	0Dh	
P0I.6	0073h	EC Host Interface interrupt	0Eh	
P0I.7	007Bh	N.A.	0Fh	
P1I.0	0083h	RSV	10h	
P1I.1	008Bh	RSV	11h	
P1I.2	0093h	RSV	12h	
P1I.3	009Bh	N.A.	13h	
P1I.4	00A3h	GPT0	14h	
P1I.5	00ABh	GPT1	15h	
P1I.6	00B3h	GPT2	16h	
P1I.7	00BBh	GPT3	17h	
P3I.0	00C3h	EXTWIO (Write Extended IO interrupt (Port80)	18h	
P3I.1	00CBh	*GPIO00~0F*	19h	
P3I.2	00D3h	*GPIO10~1B*	~~1Ah~~	
P3I.3	00DBh	*RSV*	1Bh	
P3I.4	00E3h	*RSV*	1Ch	
P3I.5	00EBh	*RSV*	1Dh	
P3I.6	00F3h	*RSV*	1Eh	
P3I.7	00FBh	ADC updated	1Fh	Lowest

The MSB of the Interrupt Vector can be set in PCON.5 (IVHV).

4.12.2 SFR Map

Color Information

XXX	Original Industrial standard 8051 features
XXX	KB3925's embedded 8051 new features
XXX	XXX Changed 8051 feature for ENE 8051

	0	1	2	3	4	5	6	7	
F8	**P3IF**								**FF**
F0	**B**								**F7**
E8	**P1IF**								**EF**
E0	**ACC**								**E7**
D8	**P0IF**								**DF**

D0	PSW								D7
C8									CF
C0									C7
B8	IP								BF
B0	P3IE								B7
A8	IE								AF
A0	P2								A7
98	SCON	SBUF	SCON2	SCON3					9F
90	P1IE								97
88	TCON	TMOD	TL0	TL1	TH0	TH1			8F
80	P0IE	SP	DPL	DPH			PCON2	PCON	87
	8	9	A	B	C	D	E	F	

This column registers are bit address-able.

P3IE, P1IE, P0IE are read/write registers used as **Interrupt Enable** (**IE**) to their corresponding interrupt inputs. These three registers are original 8051 port registers with contains 8-bits. For the embedded 8051 inside KB3925, the 3 ports are used for interrupt input (always rise pulses) extensions. Totally there are 24 interrupt events.

P3IF, P1IF, P0IF are Interrupt Flag(IF) corresponding to the 24 interrupt inputs. The Ifs are set by external interrupt event (always a rising pulse, one clock width), and are cleared by software (execute IRET instruction for active interrupt).

The original alternate 8051 port 3 functions are not related with **P3IE** and **P3IF**.

4.12.3 SFR Descriptions

(Direct Addressing 80h~FFh)

Addr	Register Abbr	Register Full Name			Def
		Bit	Attr	Description	
80h	P0IE	Port 0 IE			00h
		7 – 0	R/W	P0 Interrupt Enable Register	
81h	SP	Stack Pointer			07h
		7 – 0	R/W	Stack Pointer	
82h	DPL	DPTR Low Byte			00h
		7 – 0	R/W	DPTR low byte	
83h	DPH	DPTR High Byte			00h
		7 – 0	R/W	DPTR high byte	
84h-85h			NA	Reserved	00h
86h	PCON2	Processor Control Register 2			00h

		7	R/W		Enable level trigger interrupt (KB910L should set to 0)	
		6	R/W		**TTST**, Timer 0/1 test mode, let timer 12 times faster.	
		5	R/W		Reserved	
		4	R/W		Enable external space write.	
		3	R/W		Next Interrupt Coming Flag. The same extended interrupt coming during ISR before IRET. After exit ISR with IRET instruction, the 8051 will re-enter the ISR again if the flag is 1. Write 0 to clear the flag and prevent from 8051 re-entering the interrupt again after exit ISR.	
		2~1	NA		Reserved	
		0	R/W		Enable idle loop no fetching instruction	
87h	**PCON**	**Processor Control Register**				00h
		7	R/W			
		6	R/W		Reserved	
		5	R/W		**IVHB**, Interrupt vector highest bit. Let interrupt vector to be 00xxh or 80xxh, including standard and extended interrupt.	
		4	R/W		Reserved	
		3	R/W		**GF1**, general purposes flag.	
		2	R/W		**GF0**, general purposes flag.	
		1	WO		**Power Down Mode** Stop all 8051 clock, including all peripherals (timer, interrupt, serial port). An external Async. wake-up event can reset the latch of 8051 gated clock. Write	
		0	WO		**IDLE Mode.** Set 1 to stop processor fetching instructions. But the clock will not stop. Peripheral interrupt events will let processor exit IDLE mode. Write 1 to enter IDLE	
88h	**TCON**	**Timer/Counter Control Register**				00h
		7	R/WC	**TF1**	Timer 1 overflow flag.	
		6	R/W	**TR1**	Timer 1 run control bit.	
		5	R/WC	**TF0**	Timer 0 overflow flag.	
		4	R/W	**TR0**	Time 0 run control bit.	
		3	R/WC	**IE1**	External Interrupt 1 edge detected flag.	
		2	R/W	**IT1**	Interrupt 1 falling edge / low active control bit	
		1	R/WC	**IE0**	External Interrupt 0 edge detected flag.	
		0	R/W	**IT0**	Interrupt 0 falling edge / low active control bit	
89h	**TMOD**	**Processor Control Register**				00h
		7	R/W	**GATE1**	Gating control of TR1 and INT1.	
		6	R/W	**CT1**	=0, be a timer 1. =1, be a counter 1.	
		4~5	R/W	**TM1**	=0, Timer 1 is 13-bit timer (8048 timer). =1, Timer 1 is 16-bit timer =2, Timer 1 is 8-bit auto-reload timer =3, Timer 1 is stop	
		3	R/W	**GATE0**	Gating control of TR0 and INT0.	
		2	R/W	**CT0**	=0, be a timer 0. =1, be a counter 0.	
		0~1	R/W	**TM0**	=0, Timer 0 is 13-bit timer (8048 timer). =1, Timer 0 is 16-bit timer =2, Timer 0 is 8-bit auto-reload timer =3, Timer 0 is stop	
8Ah	**TL0**	**Timer 0 Low Byte**				00h
		7 – 0	R/W		Timer 0 Low Byte	
8Bh	**TL1**	**Timer 1 Low Byte**				00h

		7 – 0	R/W	Timer 1 Low Byte		
8Ch	**TH0**	**Timer 0 High Byte**				00h
		7 – 0	R/W	Timer 0 High Byte		
8Dh	**TH1**	**Timer 1 Low Byte**				00h
		7 – 0	R/W	Timer 1 High Byte		
90h	**P1IE**	**Port 1 IE**				00h
		7 – 0	R/W	P1 Interrupt Enable Register		
91h-97h			NA	Reserved		00h
98h	**SCON**	**Serial Port Control Register**				00h
		7~6	R/W	**SM1** **SM0**	Serial Port Mode: 00: 8-bit shift register mode, E51RX should be E51CLK shift clock. 01: 8-bit Serial Port(variable) 10: 9-bit Serial Port (variable)	
		5	NA		Reserved	
		4	R/W	**REN**	Enable Serial Port reception	
		3	R/W	**TB8**	The 9th bit of transmitted in mode 2 & 3.	
		2	R/W	**RB8**	The 9th bit of received.	
		1	R/WC	**TI**	Transmit Interrupt flag.	
		0	R/WC	**RI**	Receive Interrupt flag.	
99h	**SBUF**	**Serial Port Data Buffer**				00h
		7 – 0	R/W	Serial port data buffer		
9Ah 9Bh	**SCON2** **SCON3**	**Serial Port Control 2 / 3 Register**				00h
		7~0	R/W	**SCON2** is high-byte, **SCON3** is low byte to be a 16-bit counter for baud rate based on 8051 clock.		
A0h	**P2**	**Port 2 Latch Register**				00h
		7 – 0	R/W	Port 2, high address of external bank accessing.		
A8h	**IE**	**Interrupt Enable Register**				00h
		7	R/W	**EA**	Disable all interrupt (include extended) if clear to 0. If set to 1, all interrupts should be enabled by individual enable bit.	
		6~5	R/W		Reserved	
		4	R/W	**ES**	Enable Serial Port interrupt	
		3	R/W	**ET1**	Enable Timer 1 Overflow interrupt	
		2	R/W	**EX1**	Enable External Interrupt 1	
		1	R/W	**ET0**	Enable Timer 0 Overflow interrupt	
		0	R/W	**EX0**	Enable External Interrupt 0	
B0h	**P3IE**	**Port 3 Interrupt Enable**				00h
		7 – 0	R/W	P3 Interrupt Enable Register		
B8h	**IP**	**Interrupt Priority Register**				00h
		7~5	NA		Reserved	
		4	R/W	**PS**	Serial Port interrupt priority level	
		3	R/W	**PT1**	Timer 1 interrupt priority level	
		2	R/W	**PX1**	External Interrupt 1 priority level	
		1	R/W	**PT0**	Timer 0 interrupt priority level	
		0	R/W	**PX0**	External Interrupt 0 priority level	
B0h	**PSW**	**Processor Status Word**				00h
		7	R/W	**CY**	Carry flag.	
		6	R/W	**AC**	Auxiliary Carry flag.	
		5	R/W	**F0**	Flag 0, for user general purpose.	
		4	R/W	**RS1**	Register Bank selector 1	

Copyright©2006, ENE Technology Inc.

		3	R/W	**RS0**	Register Bank selector 0	
		2	R/W	**OV**	Overflow flag.	
		1	R/W	**F1**	Flag 1, for user general purpose.	
		0	R/W	**P**	Parity flag.	
A4h A5h A6h A7h ACh ADh AEh AFh	**RSV**					00h
D8h	**P0IF**	**Port 0 Interrupt Flag**				00h
		7 – 0	R/W	P0 Interrupt Flag Register		
E0h	**ACC**	**ACC, A**				00h
		7 – 0	R/W	Accumulator		
E8h	**P1IF**	**Port 1 Interrupt Flag**				00h
		7 – 0	R/W	P1 Interrupt Flag Register		
E0h	**B**	**B Register**				00h
		7 – 0	R/W	For MUL and DIV operations.		
F8h	**P3IF**	**Port 3 Interrupt Flag**				00h
		7 – 0	R/W	P3 Interrupt Flag Register		

5. Electronic Characteristics

5.1 Absolute Maximum Rating

Symbol	Parameter	Condition	Ratings	Unit
VCC	Power source voltage	All voltages are referenced to VSS.	-0.3 to 3.6	V
V_I	Input voltage		-0.3 to 3.6	V
V_O	Output voltage		-0.3 to 3.6	V
T_{OP}	Operating temperature		-25 to 85	℃

5.2 Recommended Operating Condition

Symbol	Parameter	Limits			Unit
		Min	Typ	Max	
VCC	Power source voltage	3	3.3	3.6	V
VSS	Ground voltage	-0.3	0	0.3	V
VCCA	Analog reference voltage(A/D and D/A converter is used)	2.5	3.3	3.6	V
AGND	Analog ground voltage		0		V

5.3 Operating Current

Symbol	Parameter	Limits			Unit
		Min	Typ	Max	

I_{CC}	Typical current consumption in operating state under Windows environment: all clock domains are running, no PS2/KB/mouse actions		TBD		mA

6. Packaging Information

6.1 64 LQFP

(10mm x 10mm x 1.4mm)

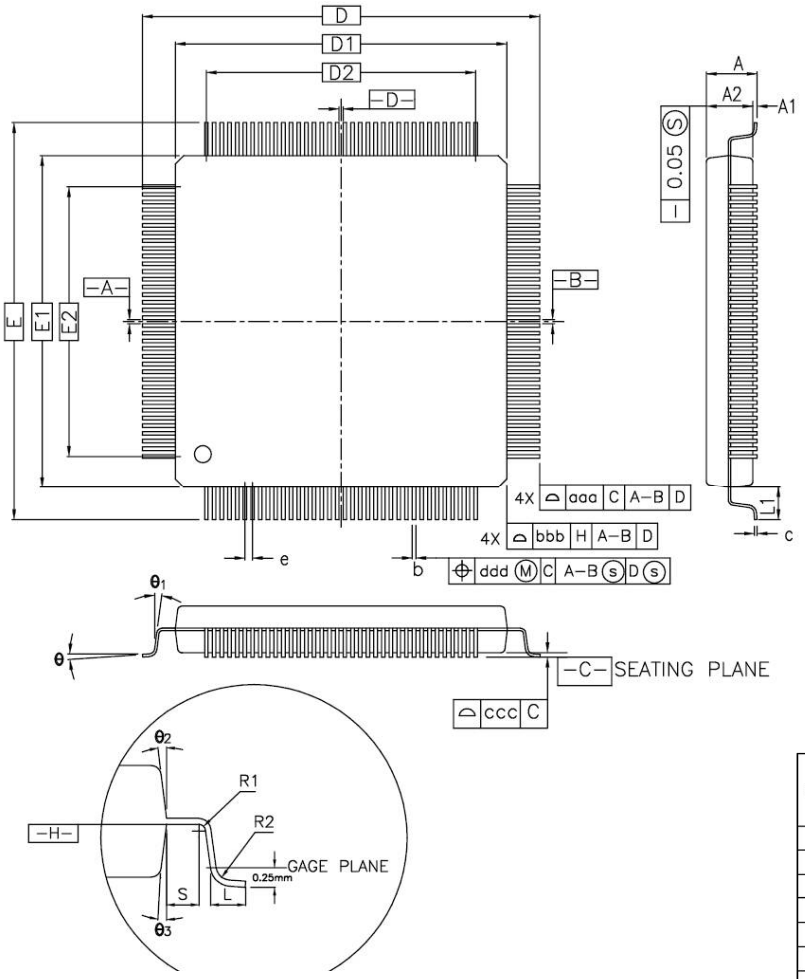

COTROL DIMENSIONS ARE IN MILLIMETERS.

SYMBOL	MILLIMETER			INCH		
	MIN.	NOM.	MAX.	MIN.	NOM.	MAX.
A	—	—	1.60	—	—	0.063
A_1	0.05	—	0.15	0.002	—	0.006
A_2	1.35	1.40	1.45	0.053	0.055	0.057
D	22.00 BSC.			0.866 BSC.		
D_1	20.00 BSC.			0.787 BSC.		
E	22.00 BSC.			0.866 BSC.		
E_1	20.00 BSC.			0.787 BSC.		
R_2	0.08	—	0.20	0.003	—	0.008
R_1	0.08	—	—	0.003	—	—
θ	0°	3.5°	7°	0°	3.5°	7°
θ_1	0°	—	—	0°	—	—
θ_2	11°	12°	13°	11°	12°	13°
θ_3	11°	12°	13°	11°	12°	13°
c	0.09	—	0.20	0.004	—	0.008
L	0.45	0.60	0.75	0.018	0.024	0.030
L_1	1.00 REF			0.039 REF		
S	0.20	—	—	0.008	—	—

SYMBOL	144L						
	MILLIMETER			INCH			
	MIN.	NOM.	MAX.	MIN.	NOM.	MAX.	M
b	0.17	0.20	0.27	0.007	0.008	0.011	0
e	0.50 BSC.			0.020 BSC.			
D2	17.50			0.689			
E2	17.50			0.689			
TOLERANCES OF FORM AND POSITION							
aaa	0.20			0.008			
bbb	0.20			0.008			
ccc	0.08			0.003			
ddd	0.08			0.003			

7. Revision History

Rev.	Preliminary/Changes	Date
0.1	Initial Release	July. 28, 2006

Copyright©2006, ENE Technology Inc.